Generalized Linked list

- A Generalized Linked List L, is defined as a finite sequence of n>=0 elements, l_1, l_2, l_3, l_4, …, l_n, such that l_i are either atom or the list of atoms. Thus
  L = (l_1, l_2, l_3, l_4, …, l_n)
  where n is total number of nodes in the list.

To represent a list of items there are certain assumptions about the node structure.

- Flag = 1 implies that *down pointer* exists
- Data means the atom
- Down pointer is the address of node which is down of the current node
- Next pointer is the address of node which is attached as the next node

- **Why Generalized Linked List?**
  Generalized linked lists are used because although the efficiency of polynomial operations using linked list is good but still, the disadvantage is that the linked list is unable to use *multiple variable polynomial equation* efficiently. It helps us to represent multi-variable polynomial along with the list of elements.

```
typedef struct node {
    char c;                    //Data
    int index;                 //Flag
    struct node *next, *down;  //Next & Down pointer
}GLL;
```

- *(a, (b, c), d)*

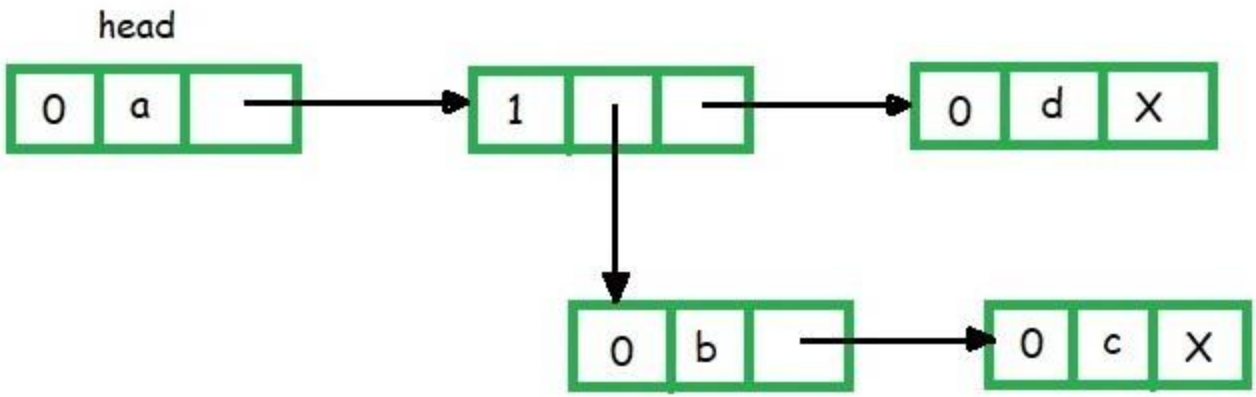

- **Polynomial Representation using Generalized Linked List**
  The typical node structure will be:

$9x^5 + 7x^4y + 10xz$

Here Flag = 0 means *variable* is present
Flag = 1 means *down pointer* is present
Flag = 2 means *coefficient* and *exponent* is present

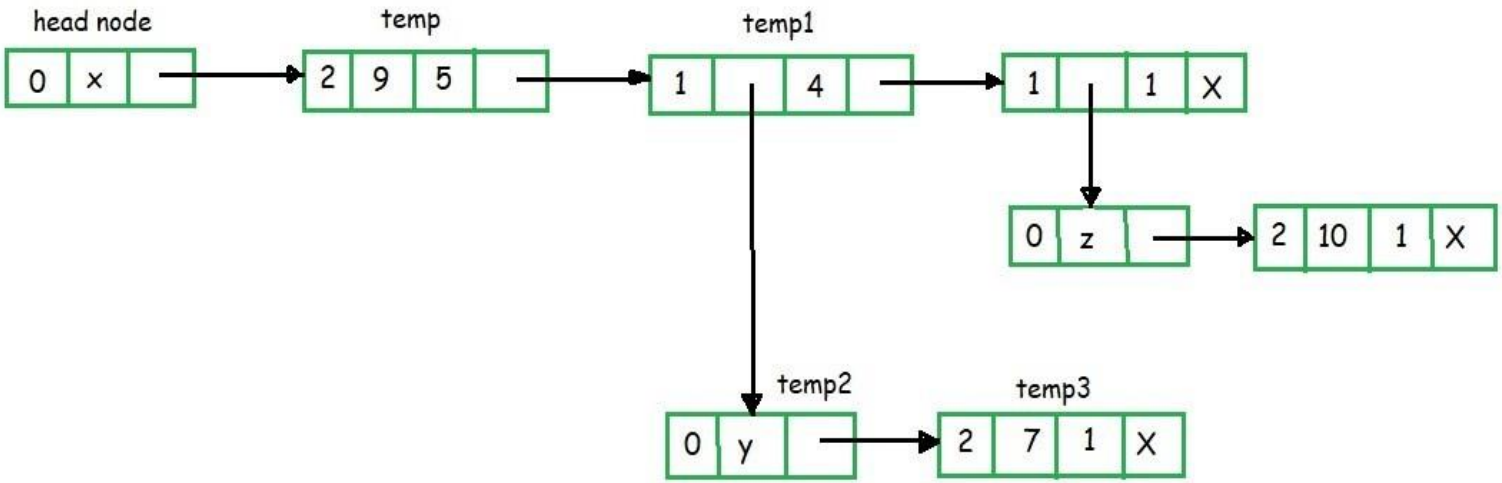

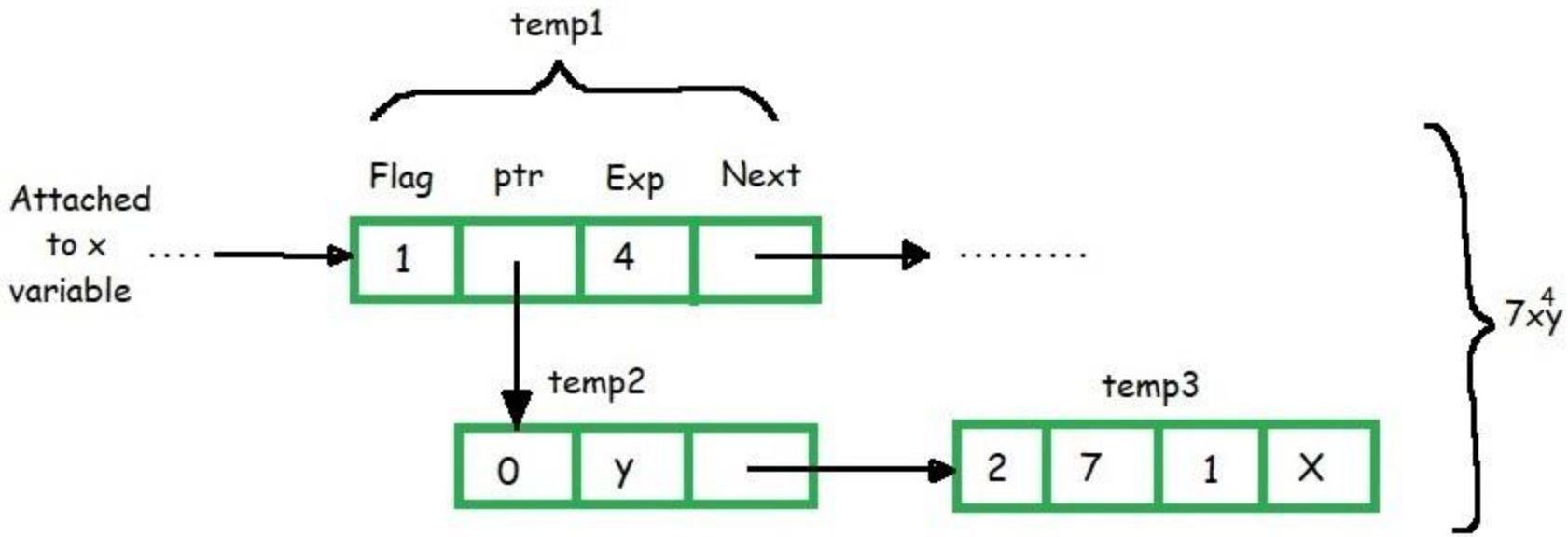
temp1
Flag
ptr
Exp
Next
Attached
to x
variable
1
4
temp2
0
y
temp3
2
7
1
X
$7xy^4$